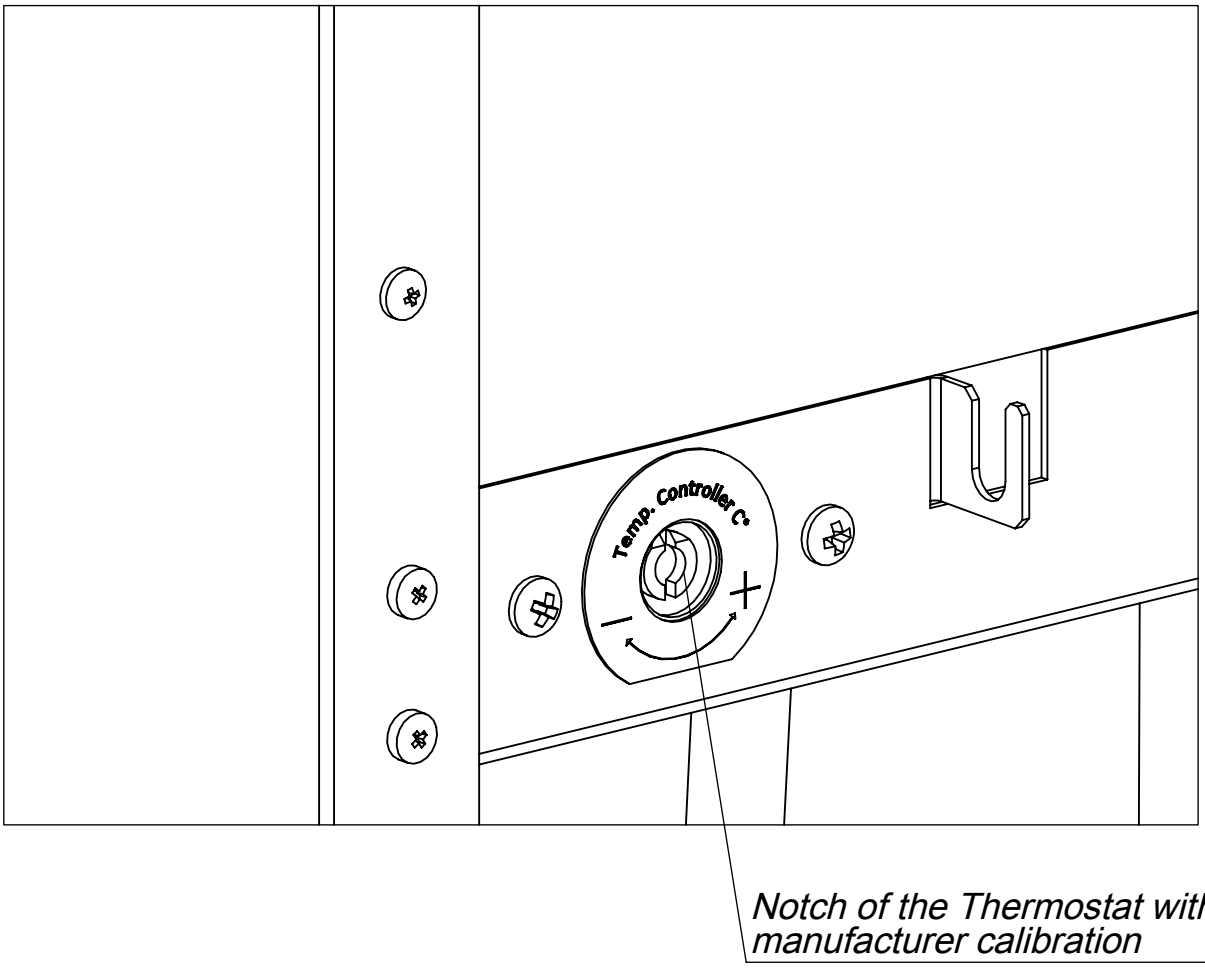

Adjusting of the cold water temperature